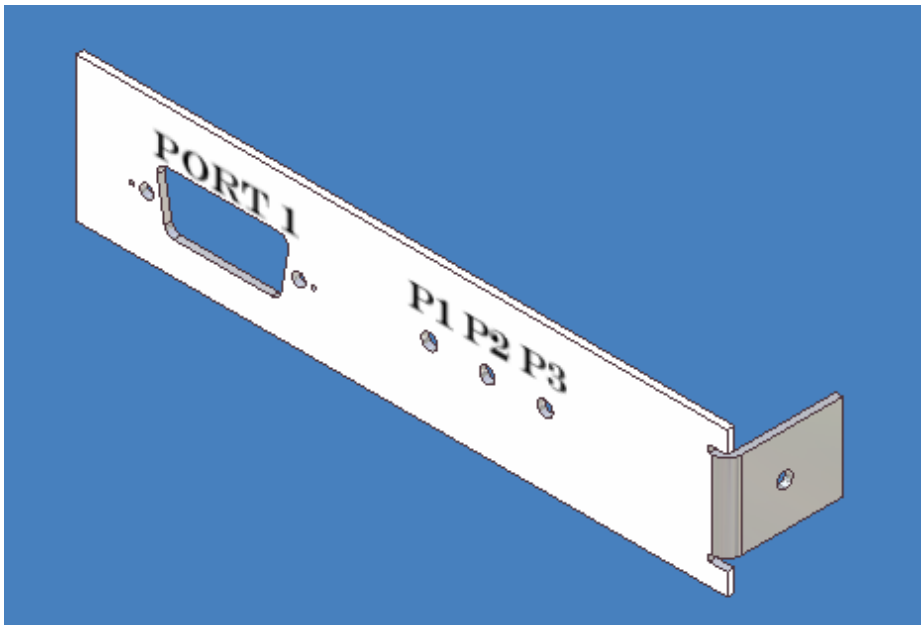
PORT 1
P1 P2 P3

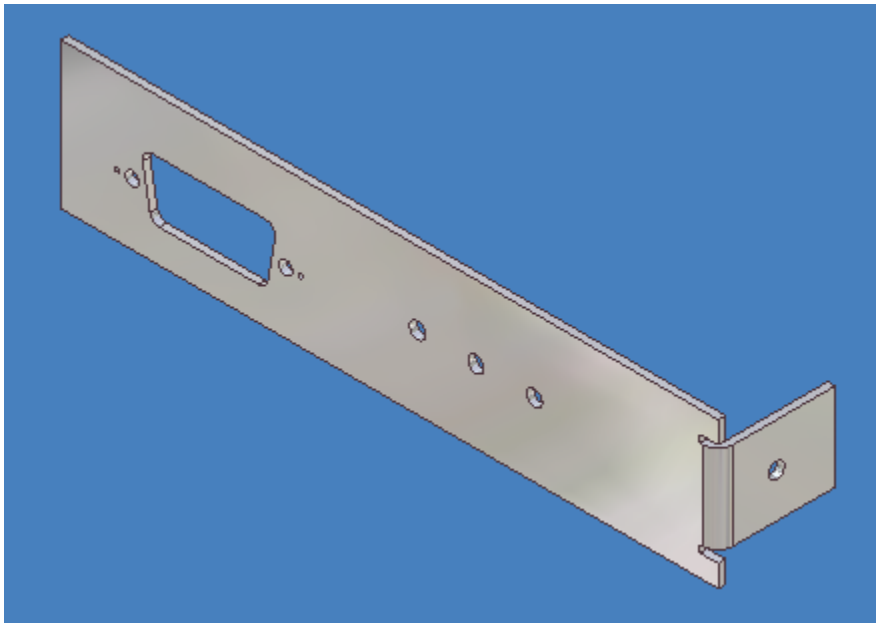

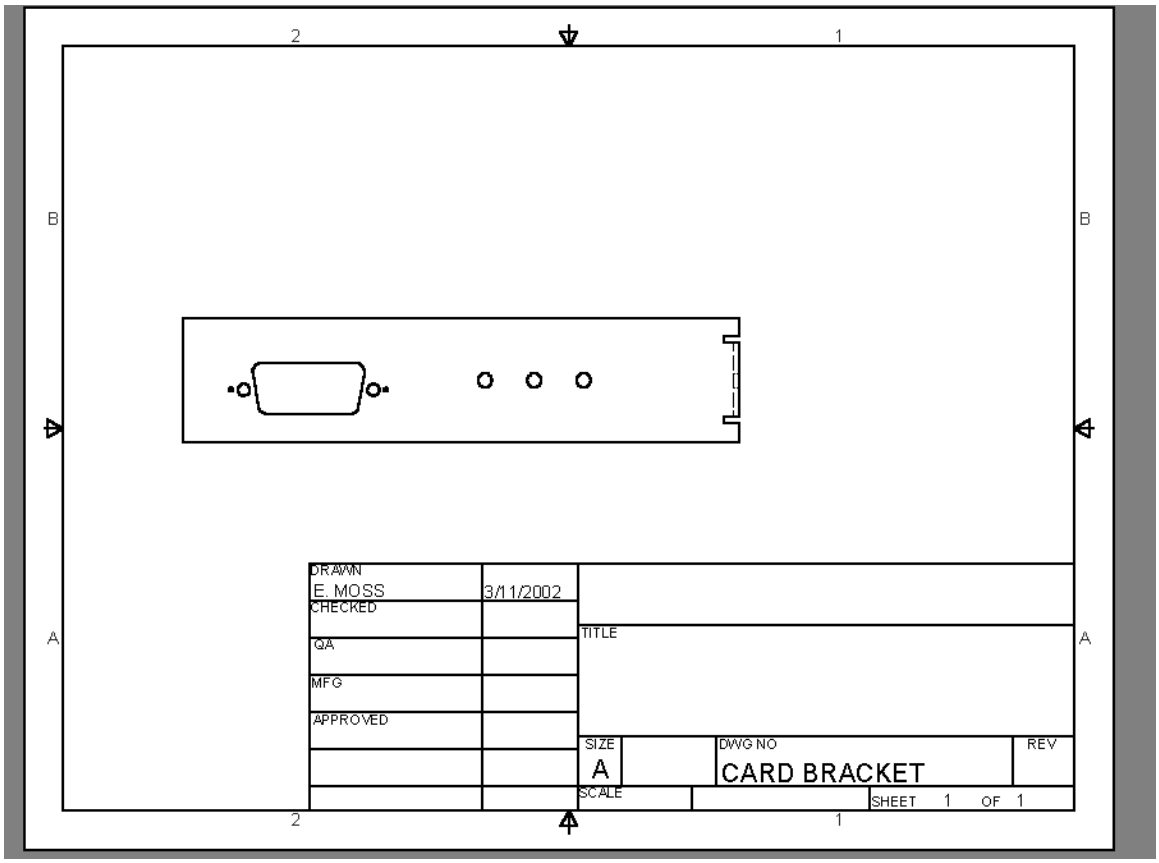
DRAWN
E. MOSS
3/11/2002
CHECKED
QA
MFG
APPROVED
TITLE
SIZE
A
DWG NO
CARD BRACKET
REV
SCALE
SHEET 1 OF 1

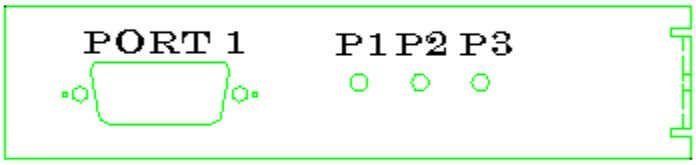
PORT 1
P1 P2 P3

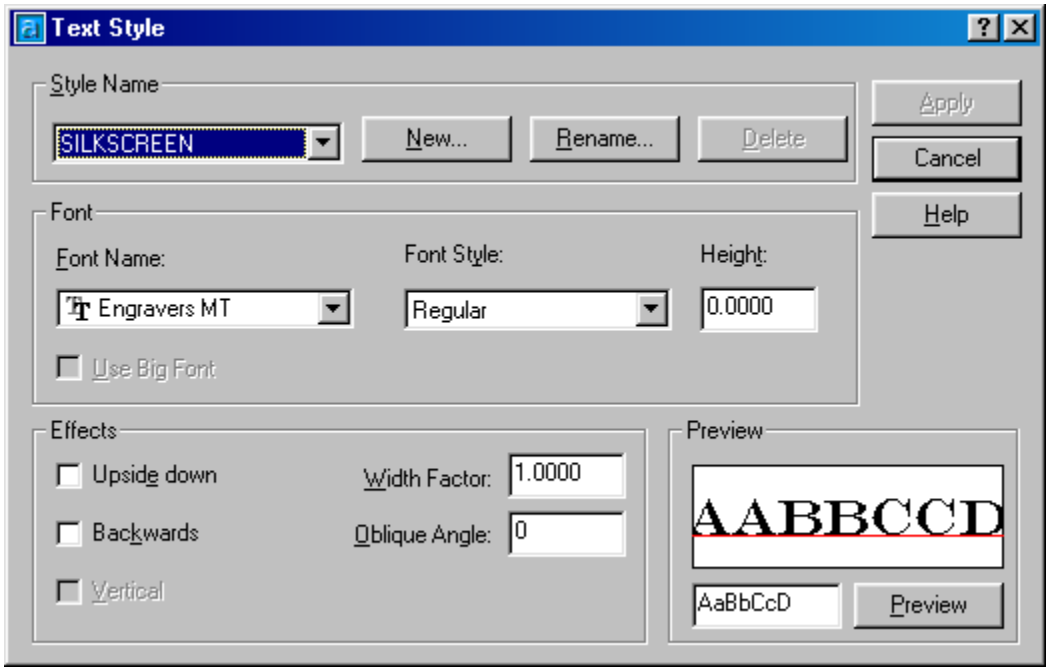
Text Style
Style Name
SILKSCREEN
New...
Rename...
Delete
Apply
Cancel
Help
Font
Font Name:
Engravers MT
Font Style:
Regular
Height:
0.0000
Use Big Font
Effects
Upside down
Backwards
Vertical
Width Factor:
1.0000
Oblique Angle:
0
Preview
AABBCCD
AaBbCcD
Preview

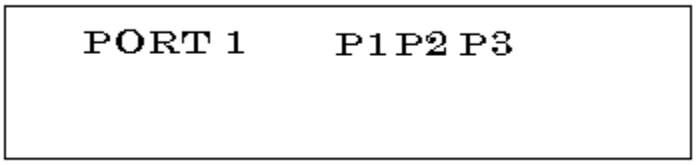
PORT 1
P1 P2 P3

PORT 1
P1 P2 P3

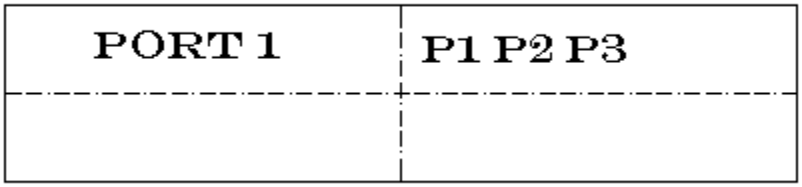
PORT 1
P1 P2 P3

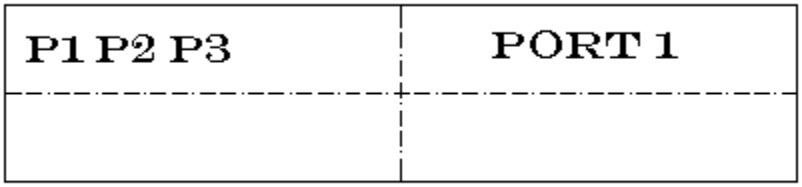
P1 P2 P3
PORT 1

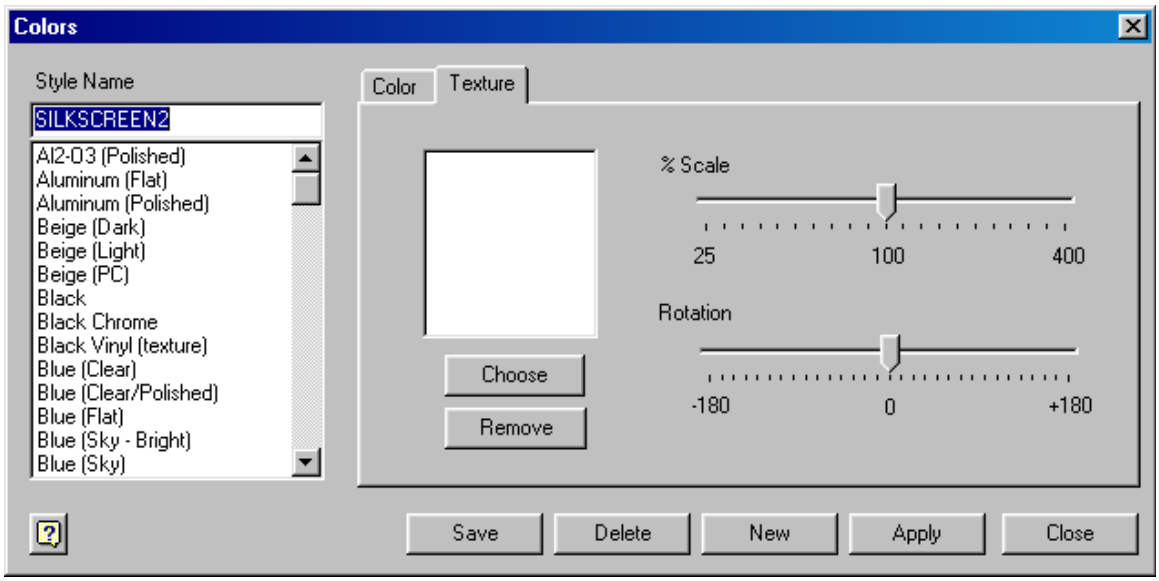
Colors
Style Name
SILKSCREEN2
Al2-O3 (Polished)
Aluminum (Flat)
Aluminum (Polished)
Beige (Dark)
Beige (Light)
Beige (PC)
Black
Black Chrome
Black Vinyl (texture)
Blue (Clear)
Blue (Clear/Polished)
Blue (Flat)
Blue (Sky - Bright)
Blue (Sky)
Color
Texture
Choose
Remove
% Scale
25
100
400
Rotation
-180
0
+180
Save
Delete
New
Apply
Close

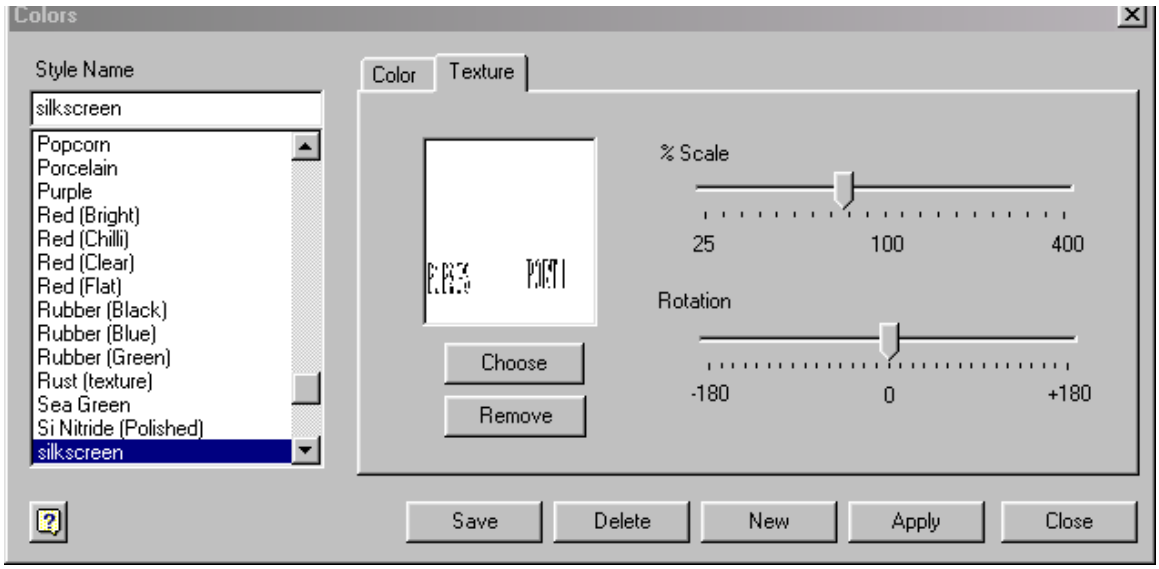
Colors
Style Name
silkscreen
Popcorn
Porcelain
Purple
Red (Bright)
Red (Chilli)
Red (Clear)
Red (Flat)
Rubber (Black)
Rubber (Blue)
Rubber (Green)
Rust (texture)
Sea Green
Si Nitride (Polished)
silkscreen
Color
Texture
Choose
Remove
% Scale
25
100
400
Rotation
-180
0
+180
Save
Delete
New
Apply
Close

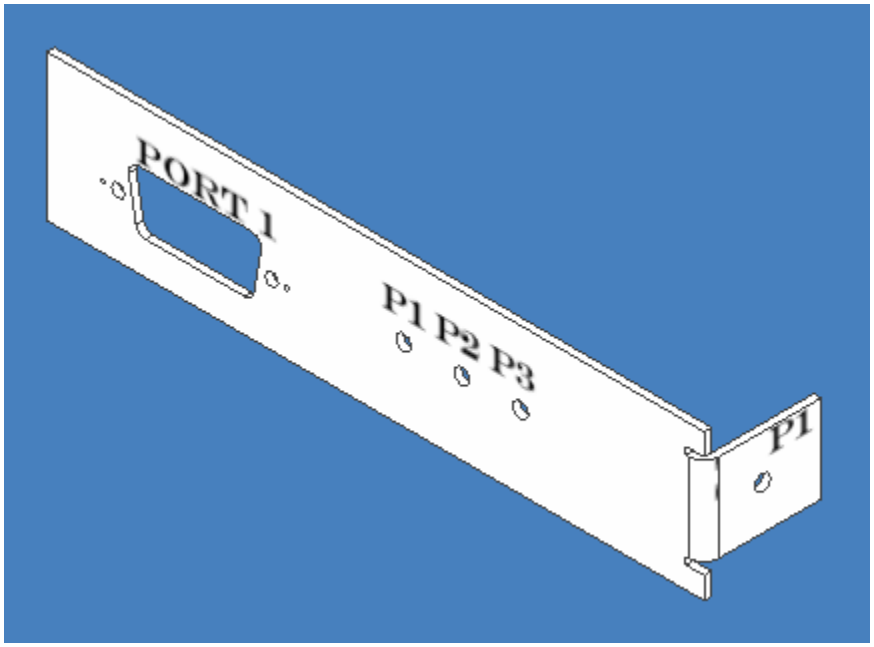
PORT 1
P1 P2 P3
P1

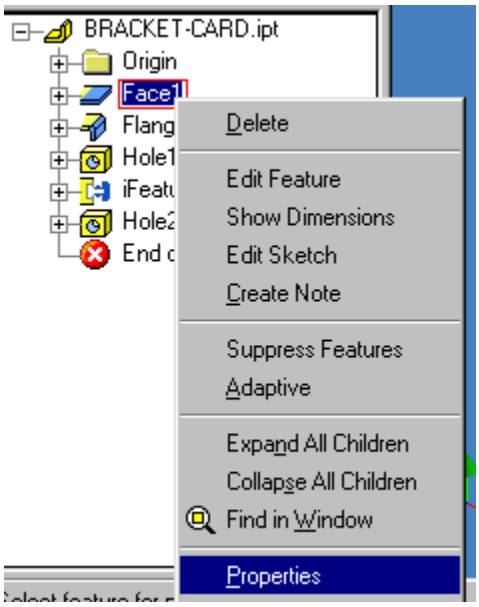
BRACKET-CARD.ipt
Origin
Face1
Flang
Hole1
iFeatu
Hole2
End c
Delete
Edit Feature
Show Dimensions
Edit Sketch
Create Note
Suppress Features
Adaptive
Expand All Children
Collapse All Children
Find in Window
Properties

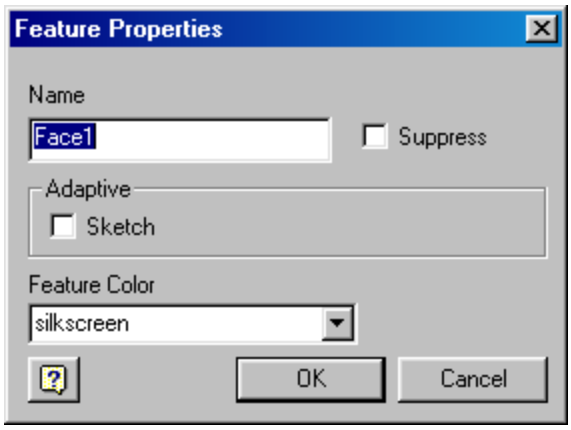
Feature Properties
Name
Face1
Suppress
Adaptive
Sketch
Feature Color
silkscreen
OK
Cancel

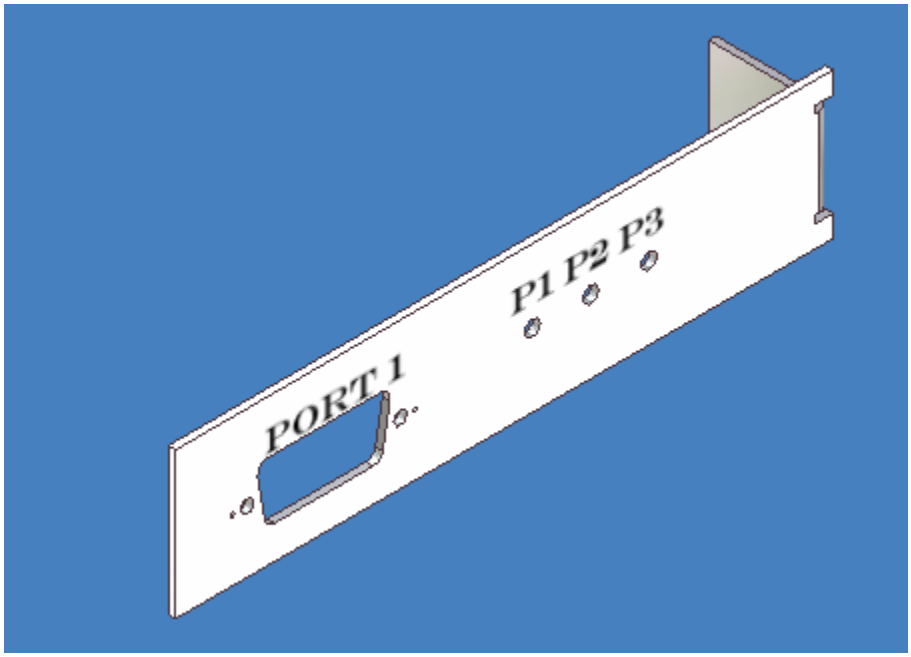
PORT 1
P1 P2 P3